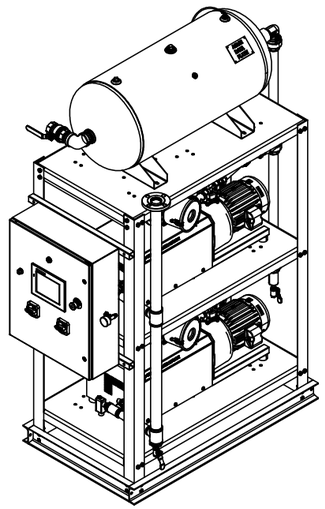

FRONT ISOMETRIC VIEW

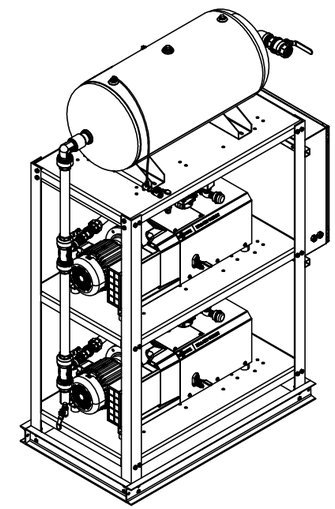

BACK ISOMETRIC VIEW

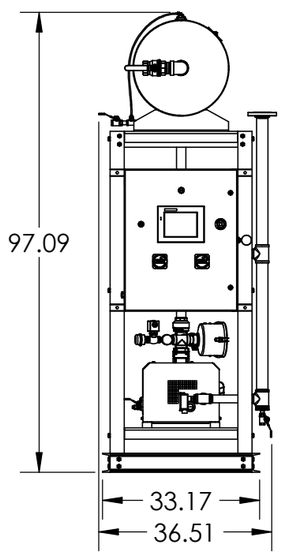

FRONT VIEW

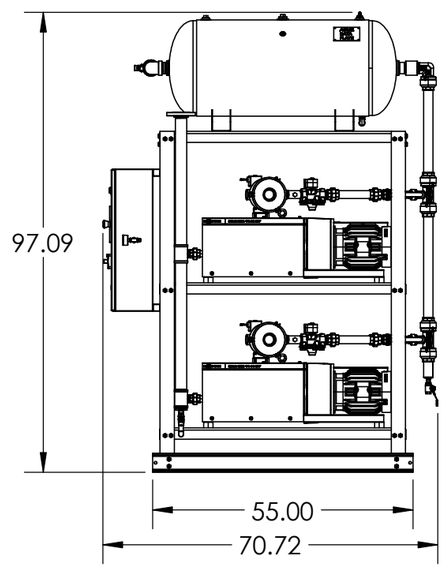

RIGHT VIEW

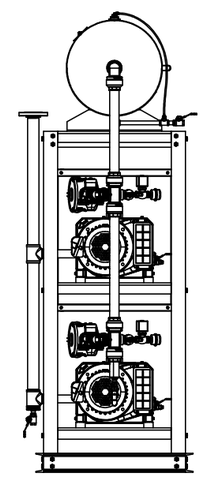

BACK VIEW

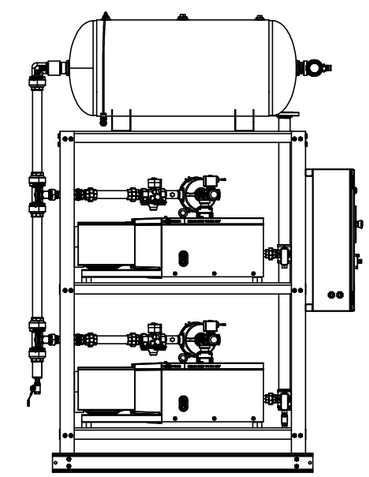

LEFT VIEW

REV	DESCRIPTION	DATE	APPROVED
0	PRE-CONSTRUCTION / SUBMITTAL APPROVAL REQUIRED	XX/XX/XX	XXX

REVISIONS

CONFIDENTIALITY NOTICE:
The information contained in this drawing is intended for use only by AIR ENERGY GROUP LLC and XXXXXXX. The information is confidential and any copying, distribution or dissemination without the written consent of National Environmental Systems is STRICTLY PROHIBITED.

GLOBALVAC & AIR
105 INDUSTRIAL BLVD / BROCKTON, MA 02301
Tel: 508-230-9445
WWW.GLOBALVACANDAIR.COM

DRWN BY PM	DATE 9/22/2026	TITLE DUPLEX 3HP LAB CLAW VACUUM SYSTEM			
CHK BY	DATE	CUSTOMER SITE LOCATION		JOB NO. XX-XXX	
APPR BY	DATE	SCALE NTS	SIZE B	DWG NO. VC03F-XXL-06H	SHEET 1 OF 3	REV --

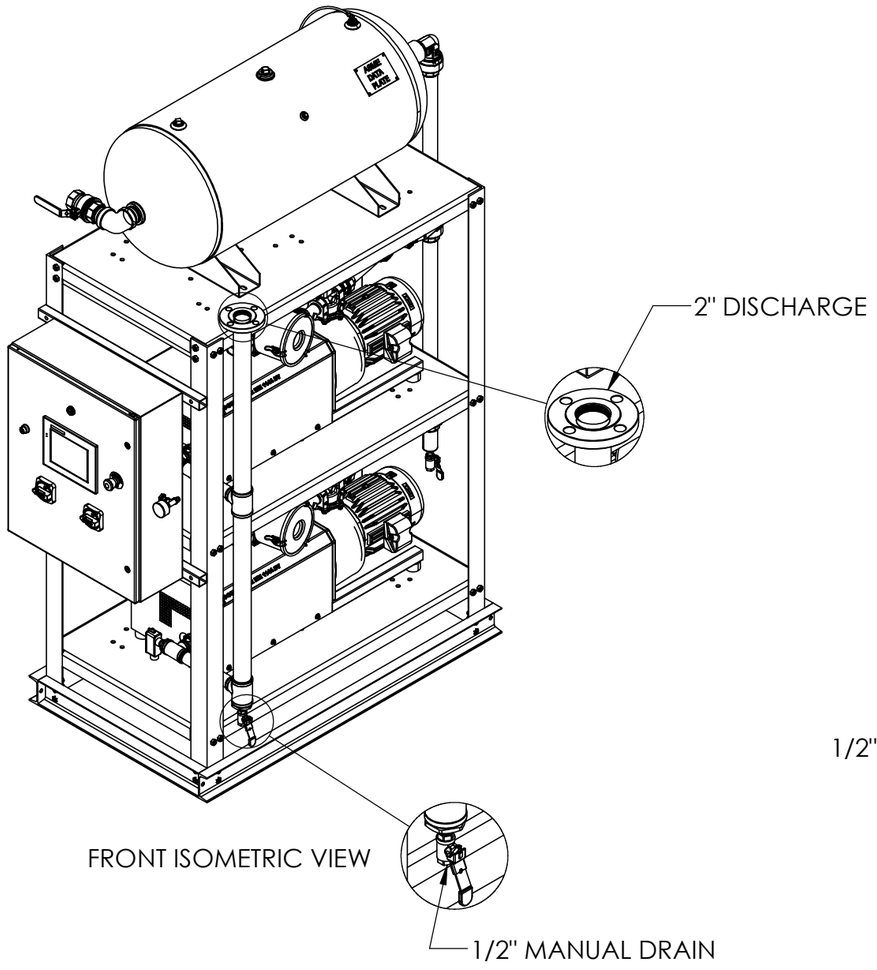

FRONT ISOMETRIC VIEW

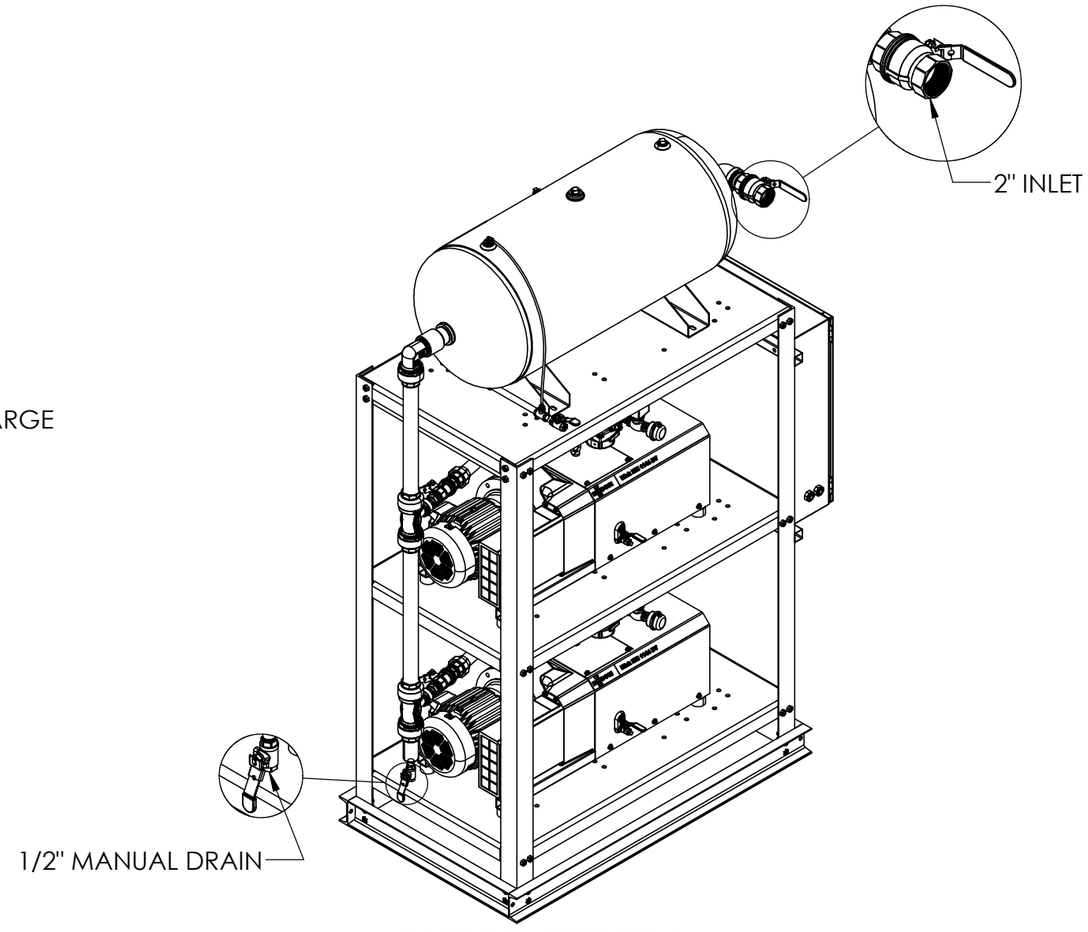

BACK ISOMETRIC VIEW

REV	DESCRIPTION	DATE	APPROVED
0	PRE-CONSTRUCTION / SUBMITTAL APPROVAL REQUIRED	XX/XX/XX	XXX

REVISIONS

CONFIDENTIALITY NOTICE:
The information contained in this drawing is intended for use only by AIR ENERGY GROUP LLC and XXXXXXX. The information is confidential and any copying, distribution or dissemination without the written consent of National Environmental Systems is STRICTLY PROHIBITED.

GLOBALVAC & AIR
105 INDUSTRIAL BLVD / BROCKTON, MA 02301
Tel: 508-230-9445
WWW.GLOBALVACANDAIR.COM

DRWN BY PM	DATE 9/22/2026	TITLE DUPLEX 3HP LAB CLAW VACUUM SYSTEM			
CHK BY	DATE	CUSTOMER SITE LOCATION			JOB NO. XX-XXX
APPR BY	DATE	SCALE NTS	SIZE B	DWG NO. VC03F-XXL-06H	SHEET 2 OF 3	REV --

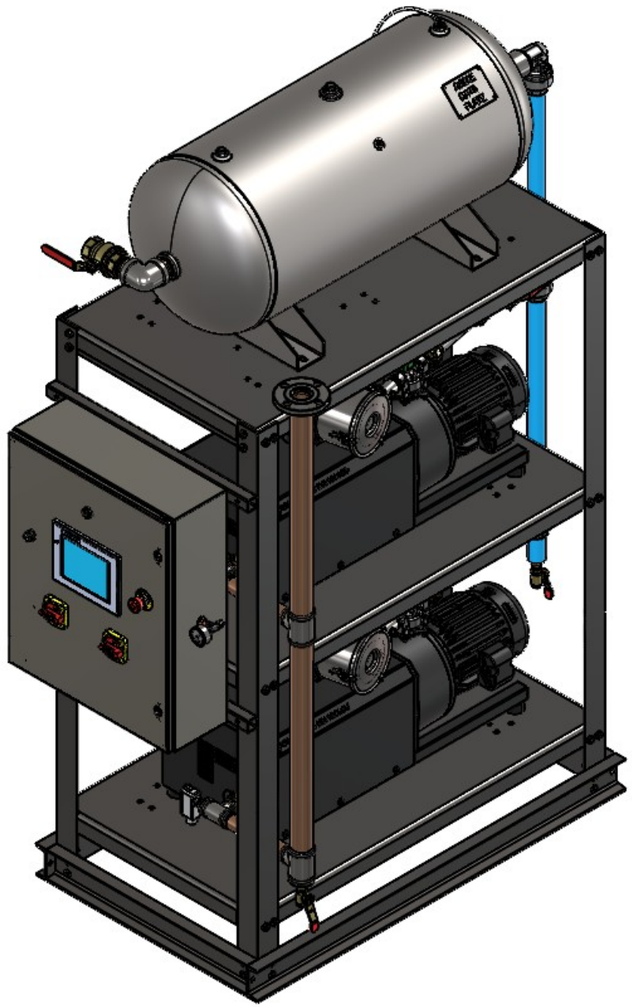

FRONT ISOMETRIC VIEW

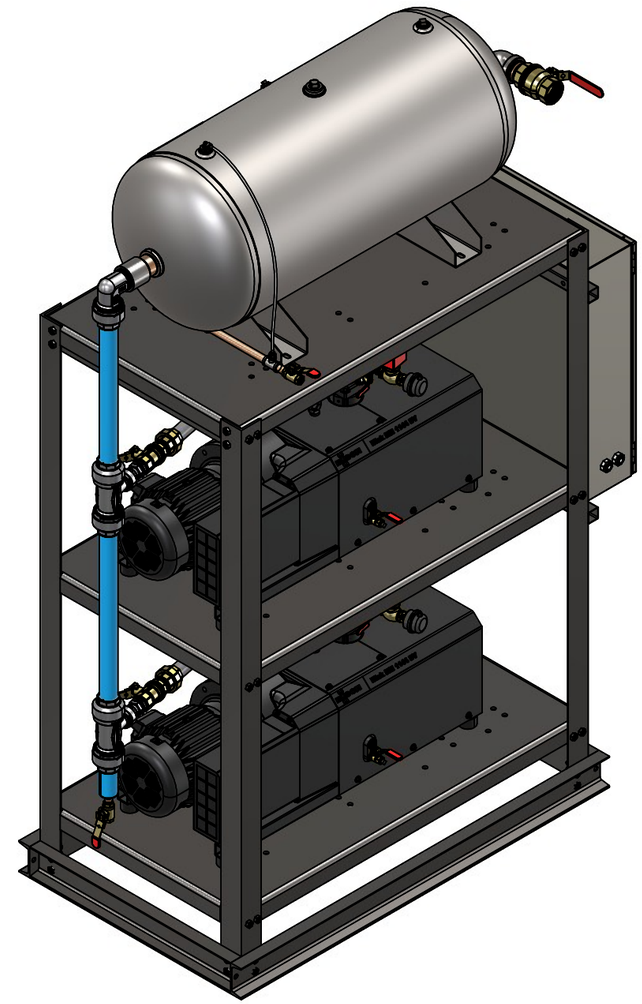

BACK ISOMETRIC VIEW

REV	DESCRIPTION	DATE	APPROVED
0	PRE-CONSTRUCTION / SUBMITTAL APPROVAL REQUIRED	XX/XX/XX	XXX

REVISIONS

CONFIDENTIALITY NOTICE:
The information contained in this drawing is intended for use only by AIR ENERGY GROUP LLC and XXXXXXX. The information is confidential and any copying, distribution or dissemination without the written consent of National Environmental Systems is STRICTLY PROHIBITED.

GLOBALVAC & AIR
105 INDUSTRIAL BLVD / BROCKTON, MA 02301
Tel: 508-230-9445
WWW.GLOBALVACANDAIR.COM

DRWN BY PM	DATE 9/22/2026	TITLE DUPLEX 3HP LAB CLAW VACUUM SYSTEM				
CHK BY	DATE	CUSTOMER SITE LOCATION			JOB NO. XX-XXX	
APPR BY	DATE	SCALE NTS	SIZE B	DWG NO. VC03F-XXL-06H	SHEET 3 OF 3	REV --